1110 Lake Cook Road
Suite 150
1110 W. Lake Cook Road
Buffalo Grove, IL 60089

HAMILTON PARTNERS
www.hamiltonpartners.com



SUITE FEATURES

- On-Site Management
- Atrium Lobby
- Building Conference Room
- Vending Area
- Energy Star Rated Building
- Adjacent to Hotels & Restaurants

FIRST FLOOR PLAN

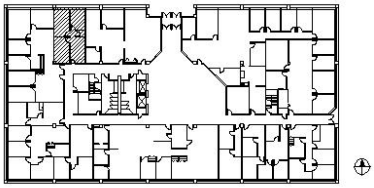

DETAILS

Square Feet:	863 S.F.
Net Rent:	$13.00/S.F.
OP. Expense:	$6.85/S.F.
Tax:	$3.42/S.F.
Gross Rent:	$23.27/S.F.

SPACE PLAN

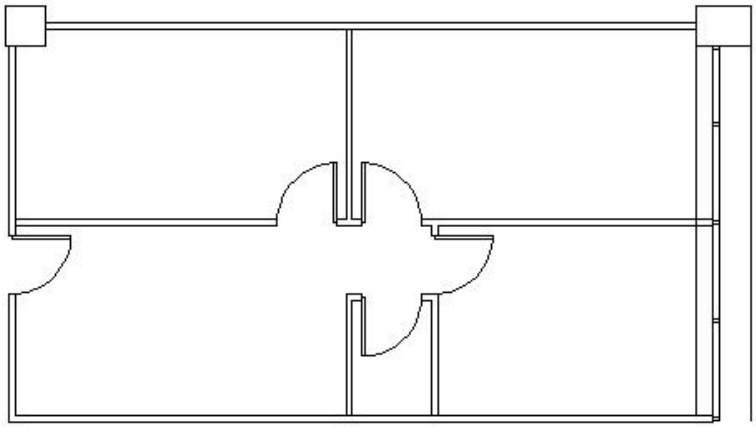

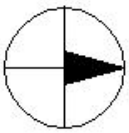

HAMILTON PARTNERS - Sponsoring Broker

Brian Lunt
blunt@hpre.com
P 847-459-2249
F 847-459-8918

Mike Rolfs
mrolfs@hpre.com
P 847-459-5561
F 847-459-8918